Preparation of compressed air → Maintenance units and components

Filter pressure regulator, Series AS2-FRE

► G 1/4 - G 3/8 ► filter porosity: 5 µm ► lockable ► For padlocks ► ATEX certified

00119371

ATEX	II 2G2D T4 X
Version	1-in-1, Can be assembled into blocks
Parts	Filter, Pressure controller
Mounting orientation	vertical
Working pressure min./max.	See table below
Medium	Compressed air
Medium temperature min./max.	-10°C / +50°C
Ambient temperature min./max.	-10°C / +50°C
Regulator type	Diaphragm-type pressure regulator
Regulator function	with relieving air exhaust
Adjustment range min./max.	See table below
Pressure supply	single
Filter reservoir volume	28 cm³
Filter element	exchangeable
Condensate drain	See table below
Materials:	
Housing	Polyamide
Front plate	Acrylonitrile butadiene styrene
Seals	Acrylonitrile Butadiene Rubber
Threaded bushing	Die cast zinc
Filter insert	Polyethylene

Technical Remarks
■ The pressure dew point must be at least 15 °C under ambient and medium temperature and may not exceed 3 °C.
■ Max. residual oil content acc. to ISO 8573-4 at the outlet: 10 mg/m³

Preparation of compressed air → Maintenance units and components

Filter pressure regulator, Series AS2-FRE

► G 1/4 - G 3/8 ► filter porosity: 5 µm ► lockable ► For padlocks ► ATEX certified

	Port	Qn	Working pressure min./max.	Adjustment range min./max.	Condensate drain	Weight	Note	Part No.
		[l/min]	[bar]	[bar]		[kg]		
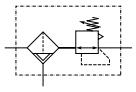	G 1/4	2100	1.5 / 16	0.5 / 8	semi-automatic, open without pressure	0.304	1); 3)	**R412006175**
	G 1/4	2100	1.5 / 16	0.5 / 8	fully automatic, open without pressure	0.347	1); 3)	**R412006176**
	G 1/4	2100	0 / 16	0.5 / 8	fully automatic, closed without pressure	0.347	1); 3)	**R412006177**
	G 1/4	2100	1.5 / 16	0.5 / 8	semi-automatic, open without pressure	0.537	2)	R412006181
	G 1/4	2100	1.5 / 16	0.5 / 8	fully automatic, open without pressure	0.66	2)	R412006182
	G 1/4	2100	0 / 16	0.5 / 8	fully automatic, closed without pressure	0.589	2)	R412006183
	G 1/4	2100	1.5 / 16	0.5 / 10	semi-automatic, open without pressure	0.304	1); 3)	**R412006193**
	G 1/4	2100	1.5 / 16	0.5 / 10	fully automatic, open without pressure	0.347	1); 3)	**R412006194**
	G 1/4	2100	0 / 16	0.5 / 10	fully automatic, closed without pressure	0.347	1); 3)	**R412006195**
	G 1/4	2100	1.5 / 16	0.5 / 16	semi-automatic, open without pressure	0.304	1); 3)	R412006236
	G 1/4	2100	1.5 / 16	0.5 / 16	fully automatic, open without pressure	0.347	1); 3)	R412006237
	G 1/4	2100	0 / 16	0.5 / 16	fully automatic, closed without pressure	0.347	1); 3)	R412006238
	G 3/8	2600	1.5 / 16	0.5 / 8	semi-automatic, open without pressure	0.347	1); 3)	**R412006184**
	G 3/8	2600	1.5 / 16	0.5 / 8	fully automatic, open without pressure	0.347	1); 3)	**R412006185**
	G 3/8	2600	0 / 16	0.5 / 8	fully automatic, closed without pressure	0.347	1); 3)	**R412006186**
	G 3/8	2600	1.5 / 16	0.5 / 8	semi-automatic, open without pressure	0.523	2)	R412006190
	G 3/8	2600	1.5 / 16	0.5 / 8	semi-automatic, open without pressure	0.655	2)	R412006191
	G 3/8	2600	0 / 16	0.5 / 8	fully automatic, closed without pressure	0.575	2)	R412006192
	G 3/8	2600	1.5 / 16	0.5 / 10	semi-automatic, open without pressure	0.523	1); 3)	**R412006203**
	G 3/8	2600	1.5 / 16	0.5 / 10	fully automatic, open without pressure	0.655	1); 3)	R412006204
	G 3/8	2600	0 / 16	0.5 / 10	fully automatic, closed without pressure	0.575	1); 3)	R412006205
	G 3/8	2600	1.5 / 16	0.5 / 16	semi-automatic, open without pressure	0.523	1); 3)	R412006239
	G 3/8	2600	1.5 / 16	0.5 / 16	fully automatic, open without pressure	0.655	1); 3)	R412006240
	G 3/8	2600	0 / 16	0.5 / 16	fully automatic, closed without pressure	0.575	1); 3)	R412006241

1) Reservoir: Polycarbonate
2) Reservoir: Die cast zinc
3) Protective guard: Polyamide
Nominal flow Qn at p1 = 6.3 bar and Δp = 1 bar

Filter pressure regulator, Series AS2-FRE

► G 1/4 - G 3/8 ► filter porosity: 5 µm ► lockable ► For padlocks ► ATEX certified

Flow rate characteristic

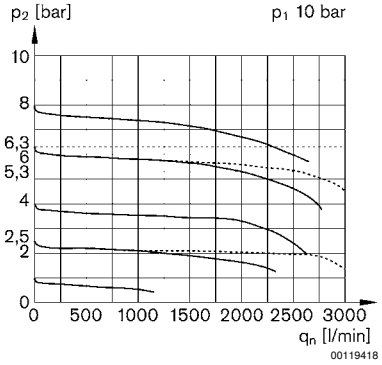

p1 = Working pressure
p2 = Secondary pressure
qn = Nominal flow

Preparation of compressed air → Maintenance units and components

Filter pressure regulator, Series AS2-FRE

► G 1/4 - G 3/8 ► filter porosity: 5 µm ► lockable ► For padlocks ► ATEX certified

Dimensions

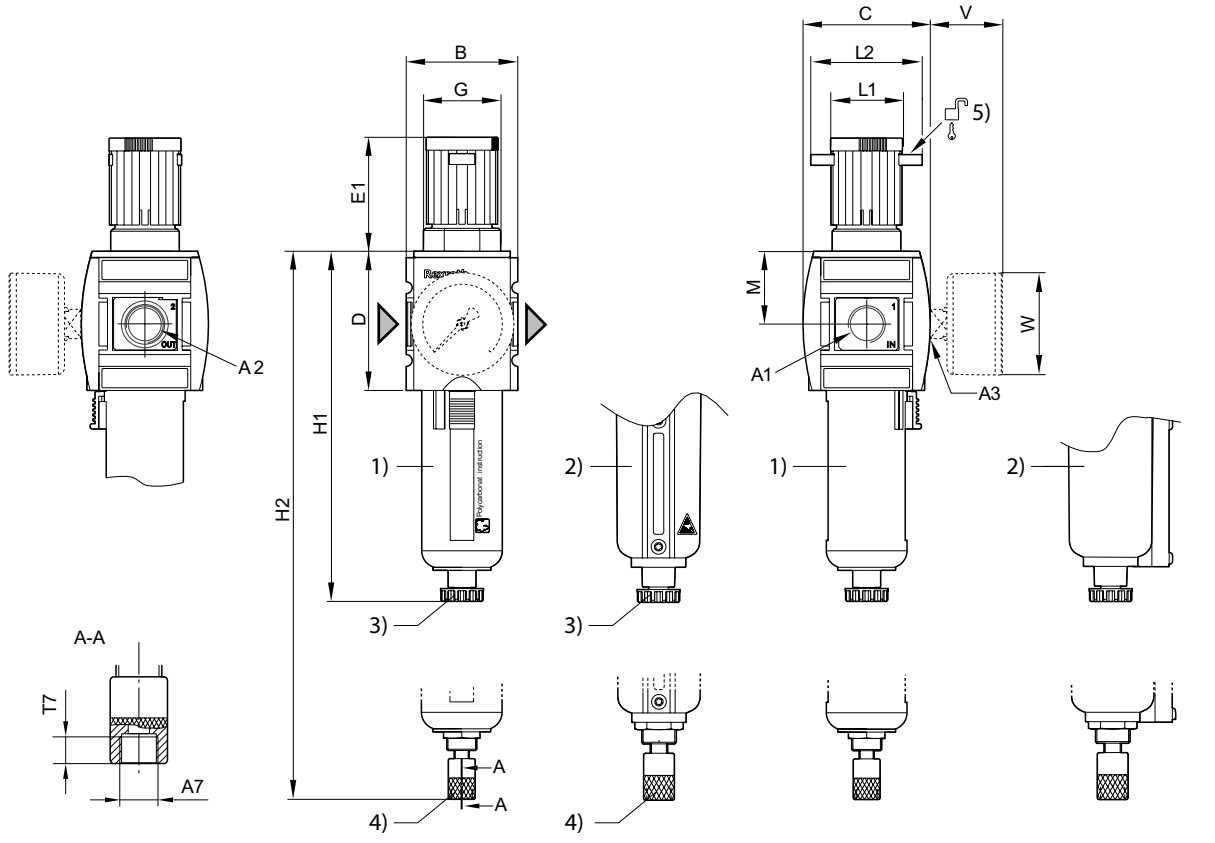

A1 = input
A2 = output
A3 = pressure gauge connection
1) Plastic reservoir and protective guard with window
2) Metal reservoir
3) Semi-automatic condensate drain
4) Fully automatic condensate drain
5) Mounting option for padlocks; max. shackle Ø 8

A1	A2	A3	A7	B	C	D	E1	G	H1	H2	L1	L2
G 1/4	G 1/4	G 1/4	G 1/8	52	59	65	57.9	M36x1,5	163.5	--	34	54
G 1/4	G 1/4	G 1/4	G 1/8	52	59	65	57.9	M36x1,5	--	180.5	34	54
G 3/8	G 3/8	G 1/4	G 1/8	52	59	65	57.9	M36x1,5	163.5	--	34	54
G 3/8	G 3/8	G 1/4	G 1/8	52	59	65	57.9	M36x1,5	--	180.5	34	54

A1	M	T7	V	W									
G 1/4	34	8.5	37	50									
G 1/4	34	8.5	37	50									
G 3/8	34	8.5	37	50									
G 3/8	34	8.5	37	50									